Reinforced Plastic Case U-shaped Type

■ Features

- Improvs noise resistance to disturbance light
- Max. 1ms high speed response type
- Built-in reverse polarity protection circuit and output overcurrent (short-circuit) protection circuit
- Light ON / Dark ON Selectable by control wire
- Protection structure IP66 (IEC standard) : BUP-30, BUP-50

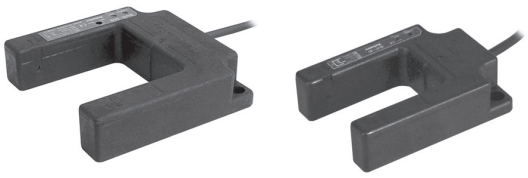

⚠ **Please read "Caution for your safety" in operation manual before using.**

CE

■ Specifications

Model	NPN open collector output	**BUP-30**	**BUP-30S**	**BUP-50**	**BUP-50S**
	PNP open collector output	**BUP-30-P**	**BUP-30S-P**	**BUP-50-P**	**BUP-50S-P**
Sensing type		Through-beam			
Sensing target		Opaque materials of min. Ø4mm	Opaque materials of min. Ø1.5mm	Opaque materials of min. Ø4mm	Opaque materials of min. Ø1.5mm
Operation mode		Selectable Light ON or Dark ON by control wire			
Sensing distance		30mm		50mm	
Response speed		Max. 1ms			
Power supply		12-24VDC ±10% (ripple P-P: max. 10%)			
Current consumption		Max. 30mA			
Light source		Infrared LED (940nm)			
Sensitivity adjustment		Fixed	Sensitivity adjuster	Fixed	Sensitivity adjuster
Control output		NPN or PNP open collector output ●Load voltage: Max. 30VDC ●Load current: Max. 200mA ●Residual voltage - NPN: Max. 1V, PNP: Max. 2.5V			
Protection circuit		Reverse polarity protection circuit, output overcurrent (short-circuit) protection circuit			
Indication		Power indicator: green LED, Operation indicator: red LED			
Insulation resistance		Over 20MΩ (at 500VDC megger)			
Noise immunity		±240V the square wave noise (pulse width: 1μs) by the noise simulator			
Dielectric strength		1,000VAC 50/60Hz for 1 minute			
Vibration		1.5mm amplitude at frequency of 10 to 55Hz (for 1 min) in each X, Y, Z direction for 2 hours			
Shock		500m/s² (approx. 50G) in each X, Y, Z direction for 3 times			
Environment	Ambient illumination	Sunlight: Max. 11,000lx Incandescent lamp: Max. 3,000lx (receiving illumination)			
	Ambient temperature	-25 to 65℃[BUP-30S (-P) & BUP-50S (-P): -10 to 60℃], storage: -25 to 70℃			
	Ambient humidity	35 to 85%RH, storage: 35 to 85%RH			
Protection structure		IP66 (IEC standard)	IP50 (IEC standard)	IP66 (IEC standard)	IP50 (IEC standard)
Material		Case: Acrylonitrile butadiene styrene, Cap: Polycarbonate			
Cable		Ø4mm, 4-wire, 2m (AWG22, core diameter: 0.08mm, number of cores: 60, insulation out diameter: Ø1.25mm)			
Accessory		—	Adjuster driver	—	Adjuster driver
Approval		CE			
Unit weight		Approx. 90g		Approx. 140g	

※The temperature or humidity mentioned in Environment indicates a non freezing or condensation environment.

■ Control Output Diagram

● NPN open collector output

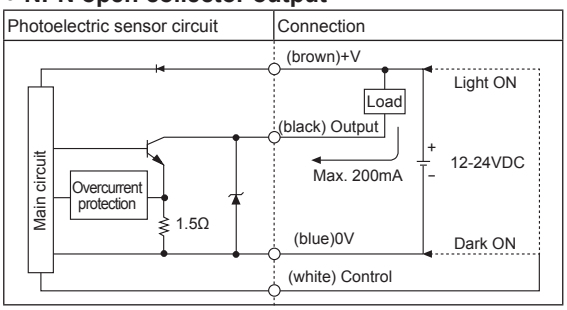

● PNP open collector output

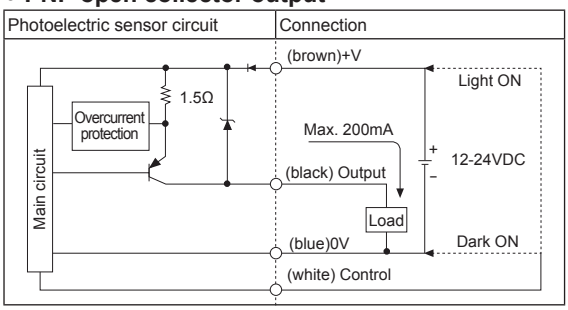

※Select Light ON / Dark ON by control wire. - Light ON: Connect control wire to +V / Dark ON: Connect control wire to 0V

■ Operation Mode

Operation mode	Light ON	Dark ON
Receiver operation	Received light Interrupted light	Received light Interrupted light
Operation indicator (red LED)	ON OFF	ON OFF
Transistor output	ON OFF	ON OFF

■ Dimensions

(unit: mm)

● BUP-30, BUP-30-P, BUP-30S, BUP-30S-P

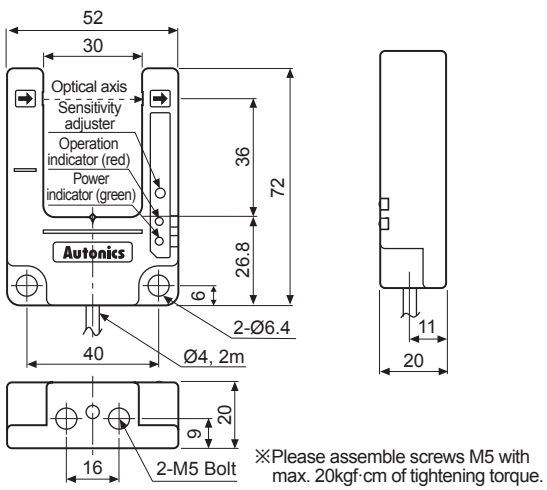

※Please assemble screws M5 with max. 20kgf·cm of tightening torque.

● BUP-50, BUP-50-P, BUP-50S, BUP-50S-P

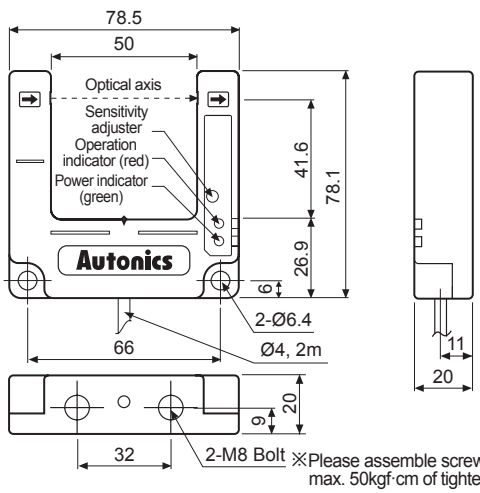

※Please assemble screws M8 with max. 50kgf·cm of tightening torque.

■ Connections

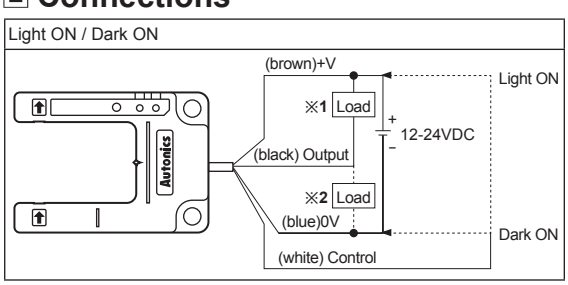

※1: Load connection for NPN open collector output
※2: Load connection for PNP open collector output

■ Mounting And Sensitivity Adjustment

Check the position where the photoelectric sensor will be used and the connection then supply the power and set sensitivity as below.

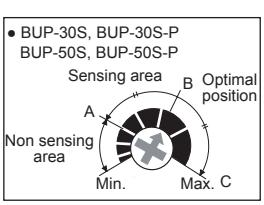

When placing a target within sensing range of sensor, turn the sensitivity adjuster from the minimum position and check the position 'A' where the operation indicator is turned on (dark on) or turned off (light on). Turn the sensitivity adjuster to 'B' in the middle between 'A' and 'C' which is the maximum sensitivity position, this will be the optimal sensitivity position. (the operation indicator can be operated at the lowest sensitivity position.)